V-MOUNTS

Large Size Desktop Movable Height Adjustable Desk

VM-FA113

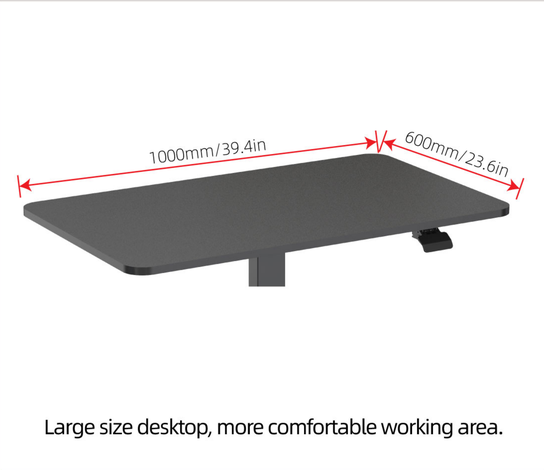

Large size desktop, more comfortable working area.

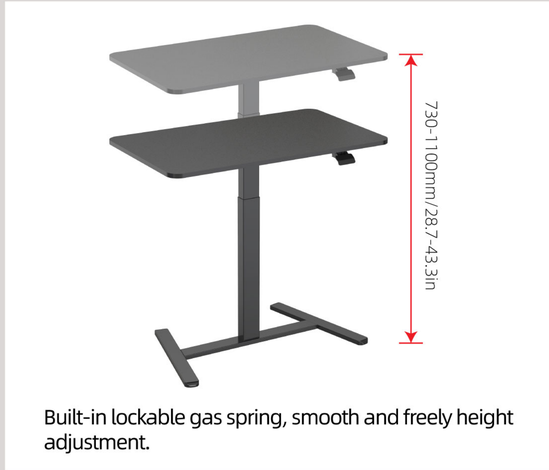

Built-in lockable gas spring, smooth and freely height adjustment.

Slimbase with invisible wheels, special for bedside and sofa side use.

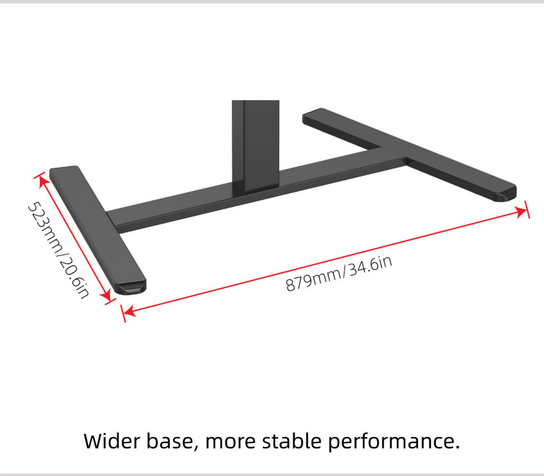

Wider base, more stable performance.

Wider handle for more comfortable handling.

Model No.	VM-FA113
Max. Load Capacity	8kg/17.6lbs
Desktop Size	1000x600mm/39.4x23.6in
Height Range	730-1100mm/28.7-43.3in
Base Size	879x523mm/34.6x20.6in
Frame Color	White/Black/Gray
Material	Steel,Particle Board,Plastic

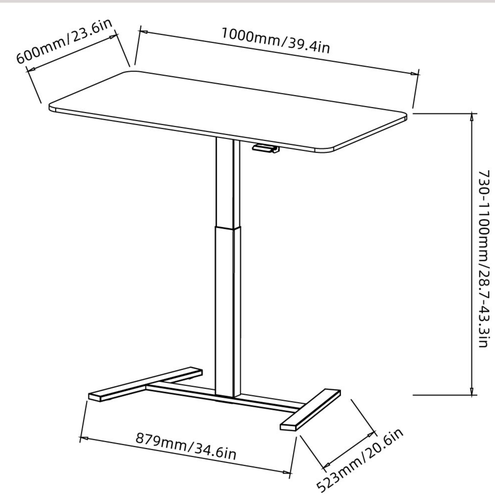

Large size desktop, more comfortable working area

Built-in lockable gas spring, smooth and freely height adjustment

Wider base, more stable performance

Simple and firm structure, easy and fast installation