V-MOUNTS

Gas Spring Adjustable and Reversible Mobile Laptop Desk

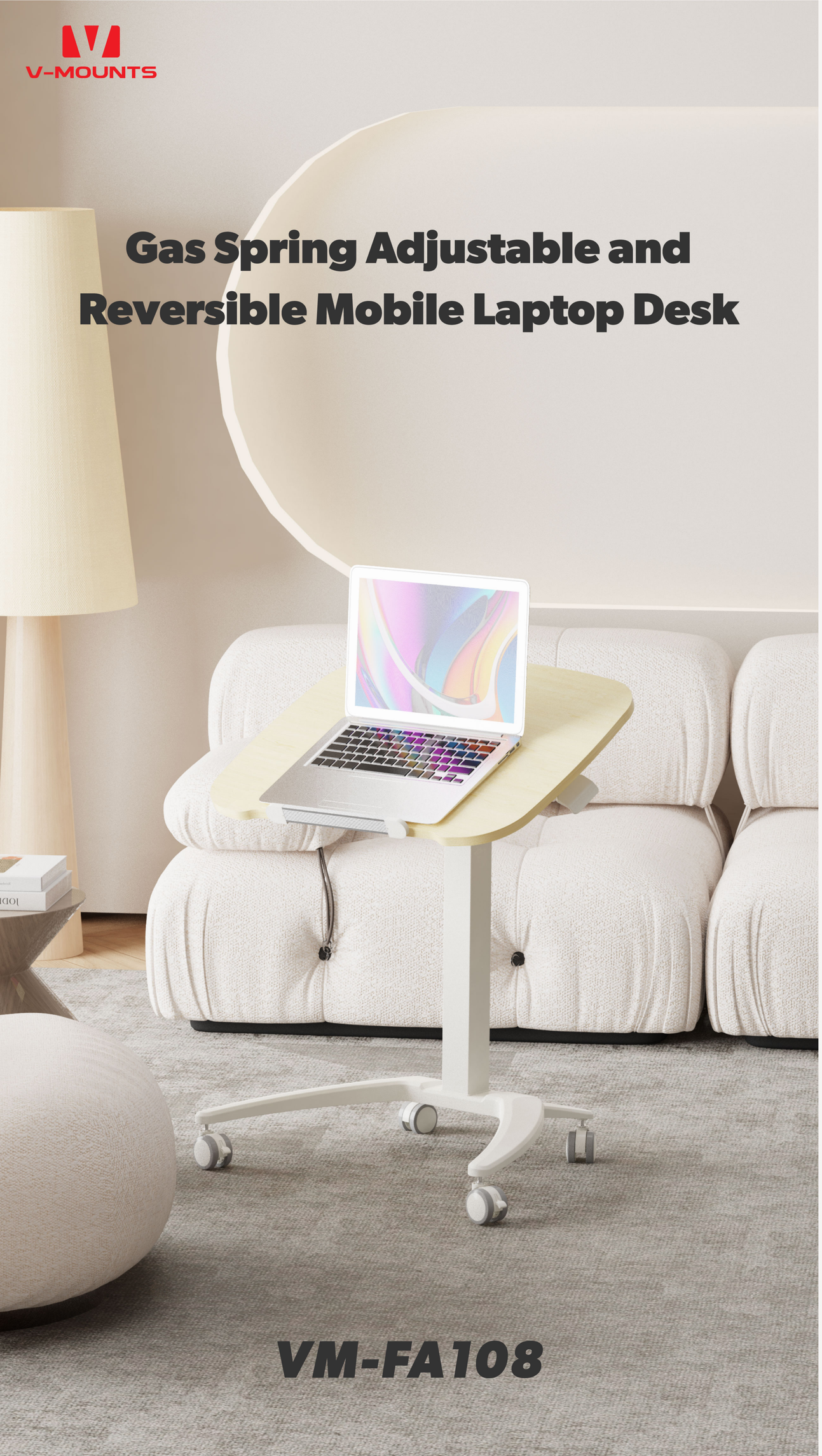

VM-FA108

Multi-scenario use considerations, the desktop can be flipped 0~90°.

Increase desktop support, anti-slip design.

Splash-proof and easy to clean table surface.

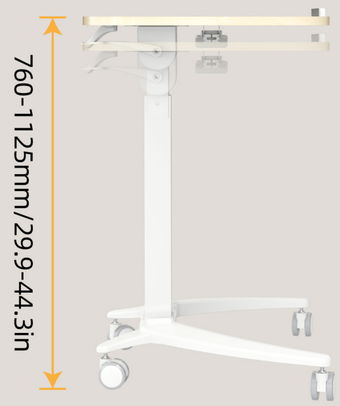

Built-in gas spring, free to adjust the height of the lift.

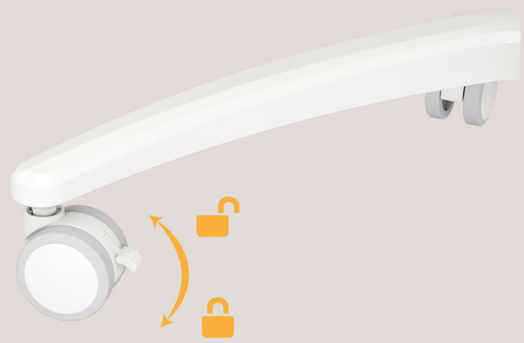

Universal wheel design, can move or stop at will.
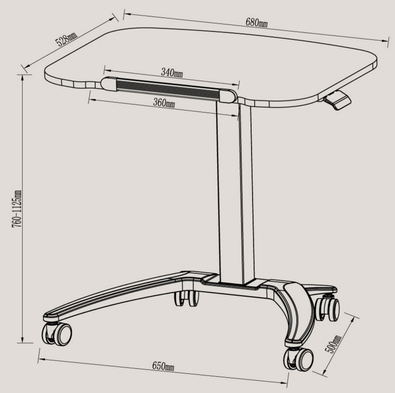
Model No.	VM-FA108
Max. Load Capacity	8KG/17.6lbs
Desktop Size	680x528x18mm/26.8x20.8x0.7in
Height Range	760-1125mm/29.9-44.3in
Desktop flip angle	0~90°
Color	White/Black
Material	Steel,PB,Plastic,Aluminum