V-MOUNTS

Ergonomic Adjustable Height Desk with Dual Motor

JSD2-02-Z-Q

Altitude memory mode allows easy altitude switching.

The height of the foot pads is adjustable for ergonomics.

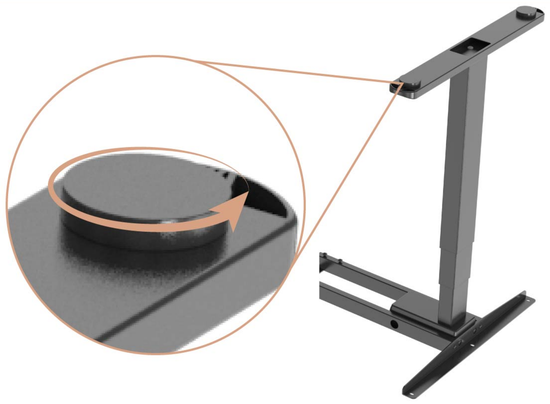

LED

LED screen display is simple.

×2

Dual motor drives smoothly.

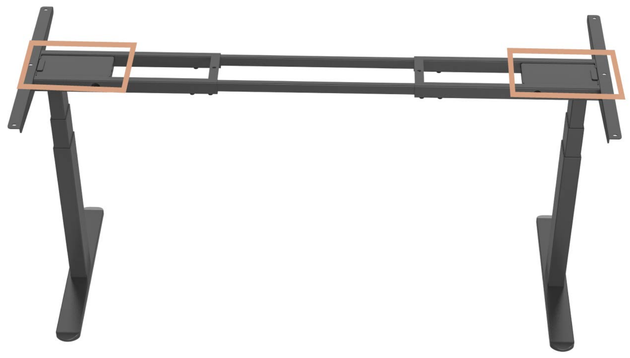

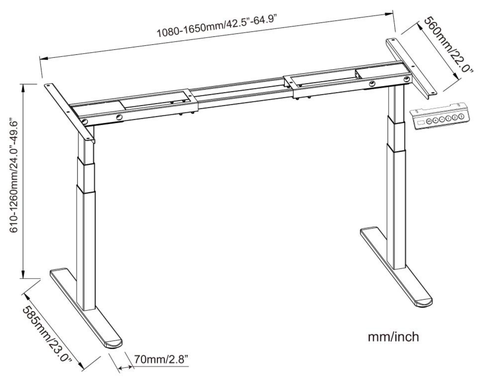

Model No.	JSD2-02-Z-Q
Max. Load Capacity	80KG/176Lbs
Lifting Speed	80mm/s
Height Range	610-1260mm/24.0-49.6 in
Color	White/Black/Gray
Material	Steel, Plastic