V-MOUNTS

Ergonomic Electric Tempered Glass Adjustable Desk

JSD5-02-G4

Conveniently organized drawer use space.

Self-contained fast charging interface.

Specially designed hand controller equipment.

Glossy and easy-to-clean tempered glass material.

Micro-adjustable non-slip foot pad design.
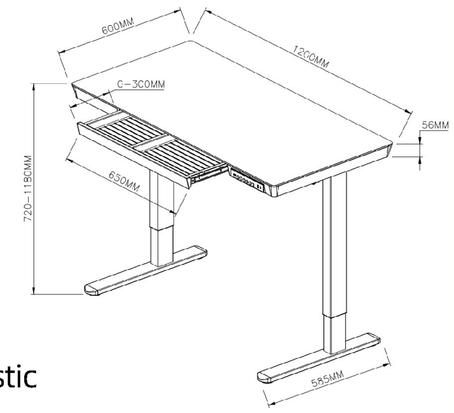
Model No.	JSD5-02-G4
Max. Load Capacity	50KG/110Lbs
Height Range	720-1180mm/28.3-46.5 in
Color	White/Black
Material	Steel,Stalinite,Aluminum,Plastic