V-MOUNTS

Combined Use of Multifunctional Manually Adjustable Height Mobile Desks with Lockable Casters

Manually adjustable height, handle can be folded.

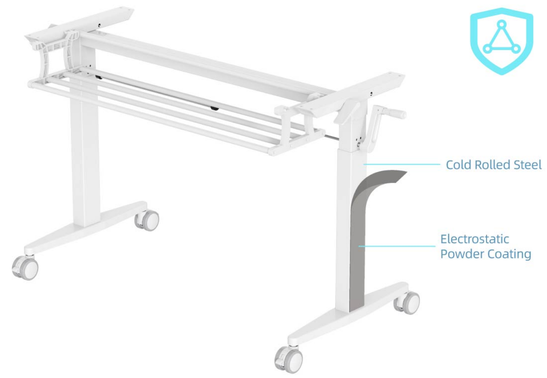

Solid material, not easy to deform.

With bracket for convenient storage.

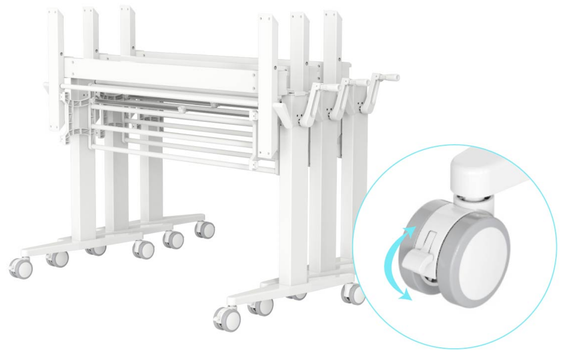

The front two wheels of the bottom gimbal are equipped with brakes, so that the table can be moved or stopped at will.

Model No.	VM-FC202
Max. Load Capacity	30KG/66 lbs
Base Size	995x480mm/39.2×18.8 in
Height Range	675-975mm/26.6-38.4 in
Color	White/Black
Material	Steel, Plastic

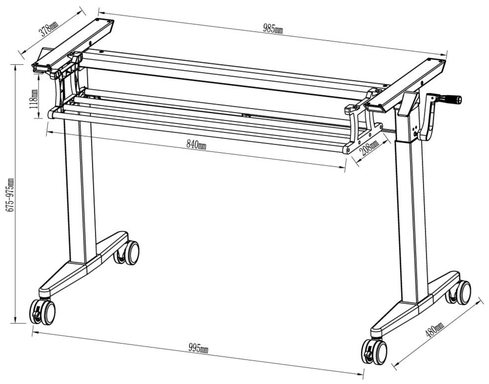

VM-FC202