V-MOUNTS

# Electric Height Adjustable Mobile Laptop Desk

Powered by lithium battery pack, no power socket required.

Splash-proof surface for quick and easy cleaning.

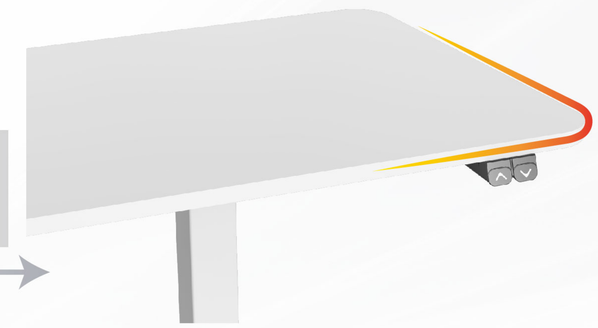

Safety-first design with curved desktop edges.

Automatically senses obstacles to ensure safety.

Adjustable height for ergonomic comfort.

Mobile laptop desk with lockable universal wheel.

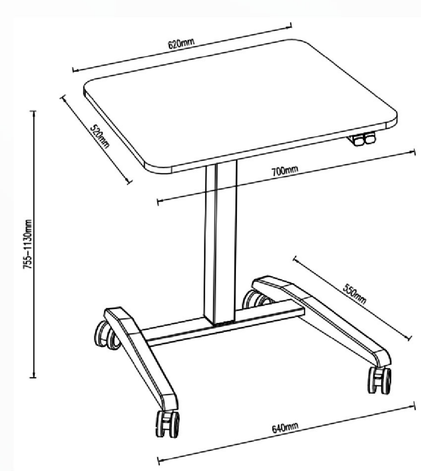


| Model No. | VM-FB103 |
|---|---|
| Max. Load Capacity | 30kg/66lbs |
| Desktop Size | 700x520mm/27.6x20.5in |
| Height Range | 755-1130mm/29.7-44.5in |
| Base Size | 640x550mm/25.2x21.7in |
| Product Color | White/Black |
| Material | Steel,Particle Board,Plastic |

# VM-FB103