V-MOUNTS

Electric Height Adjustable Standing Desk

with Stretchable Function

JSD5-02-EU2

01

Stretchable frame with width adjustable function.

* Desktop that can be matched with a maximum of 1600mm/65.3 in

02

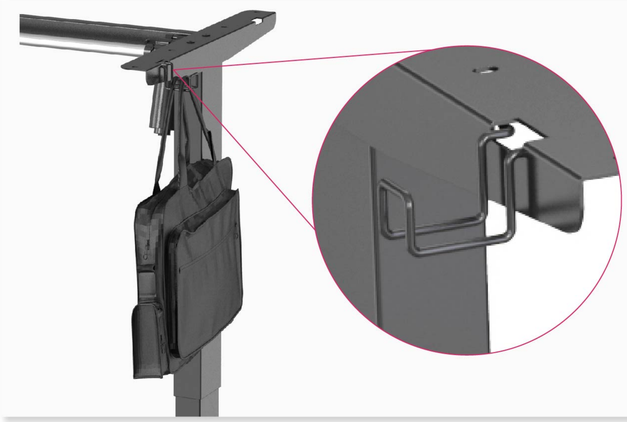

Wire hooks for easy storage.

03

LED screen display is simple.

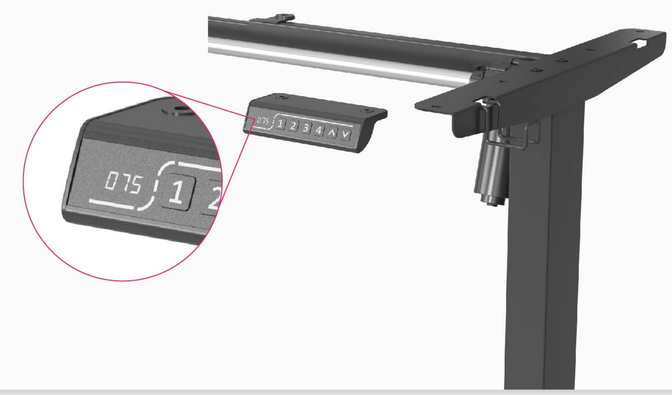

04

Altitude memory mode allows easy altitude switching.

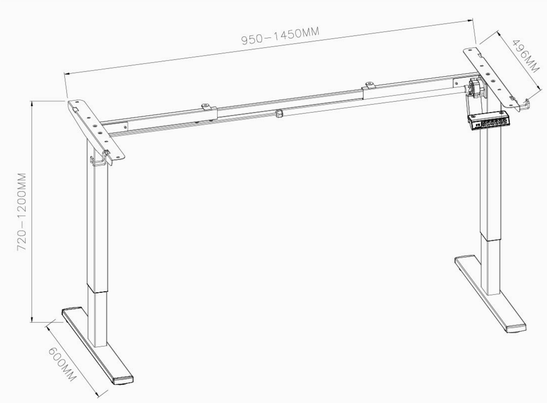

Model No.	JSD5-02-EU2
Max. Load Capacity	80KG/176Lbs
Stretch range	950-1450mm/37.4-57.1in
Height Range	720-1200mm/28.3-47.2 in
Color	White/Black/Gray
Material	Steel, Plastic