Tempered Glass
Ergonomic Sit to Stand Electric Desk

JSD5-01-LA

Adjustable Height

Easy to Clean

Hassle-Free Assembly

Durable Material

Stylish and Modern:
Design perfect for any contemporary office or home office.

Adjustable Height: Comfortable posture for working, whether standing or sitting.

Clear Display: LED screen, simple and intuitive.

Easy to Clean: Smooth surface resistant to stains and grime.

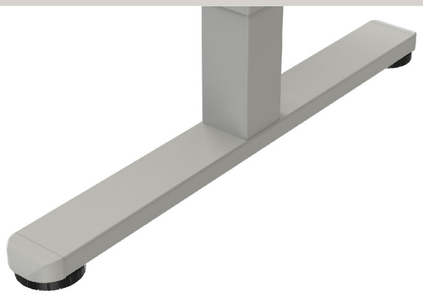

Customizable Foot Pad Height: Height can be adjusted to fine-tune any level differences.

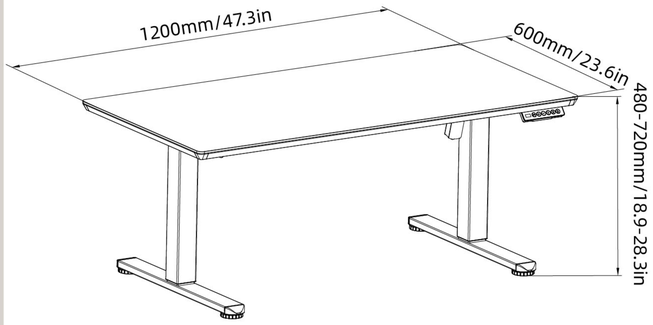

Model No.	JSD5-01-LA
Max. Load Capacity	70KG/154lbs
Desktop Size	1200x600mm/47.3x23.6in
Height Range	480-720mm/18.9-28.3in
Color	White/Black
Material	Steel,Aluminum,Stalinite,Plastic