V-MOUNTS

# Movable Height Adjustable Laptop Desk

**VM-FDS115A**

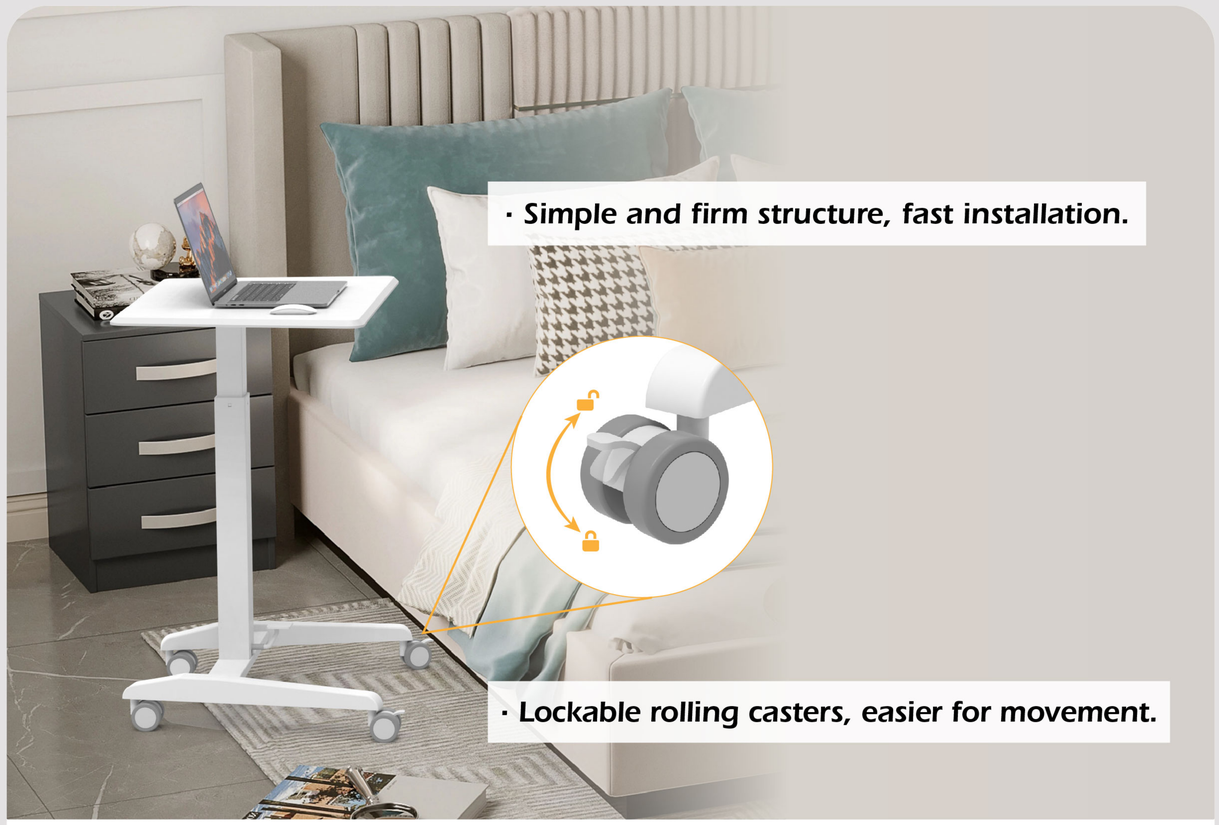

· Simple and firm structure, fast installation.

· Lockable rolling casters, easier for movement.

· Built-in lockable gas spring, freely height adjustment.

· Foot pedal for height adjustment, easy to operate.

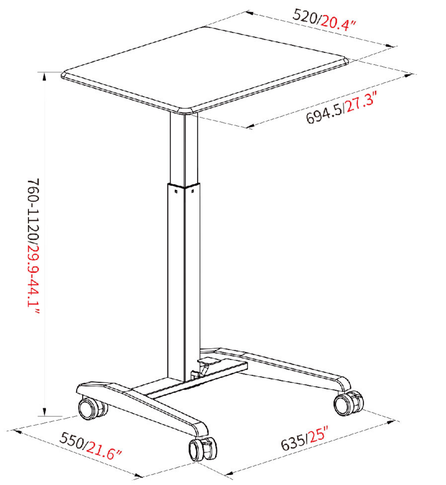


mm/inch

| | |
|---|---|
| Model No. | VM-FDS115A |
| Max. Load Capacity | 8KG/17.6lbs |
| Desktop Size | 694.5x520mm/27.3x20.4in |
| Height Range | 760-1120mm/29.9-44.1in |
| Base Size | 635x550mm/25.0x21.6in |
| Product Color | White/Black |
| Material | Steel, Plastic, MDF |