SMC

SOVE

GZP3P series(Organ Type)

- Handling plastic film bags
- Open plastic film bags
- Suction cup diameter: 20/25/35/50mm

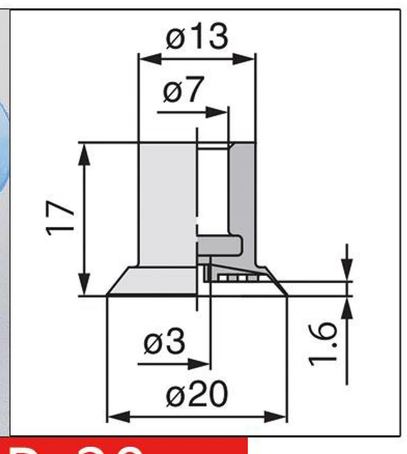

GZP3P-20

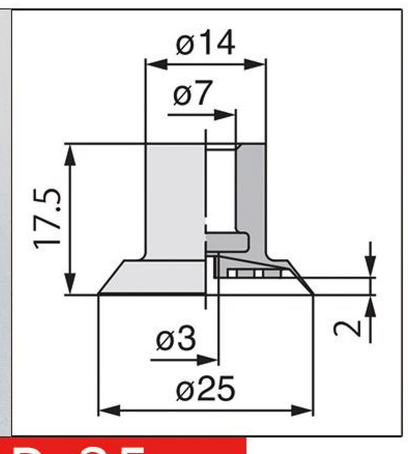

GZP3P-25

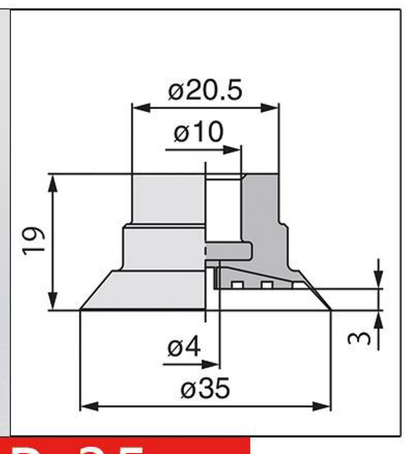

GZP3P-35

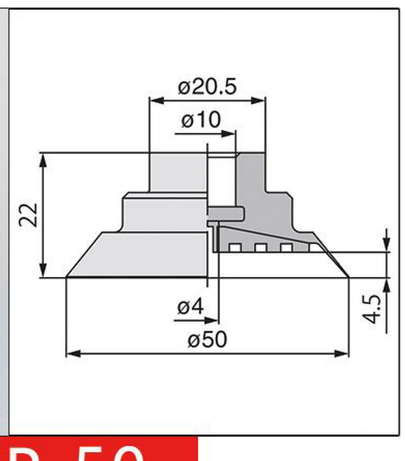

GZP3P-50

SMC

SOVE

ZP3P-A12

ZP3P-A5A

ZP3P-B5A

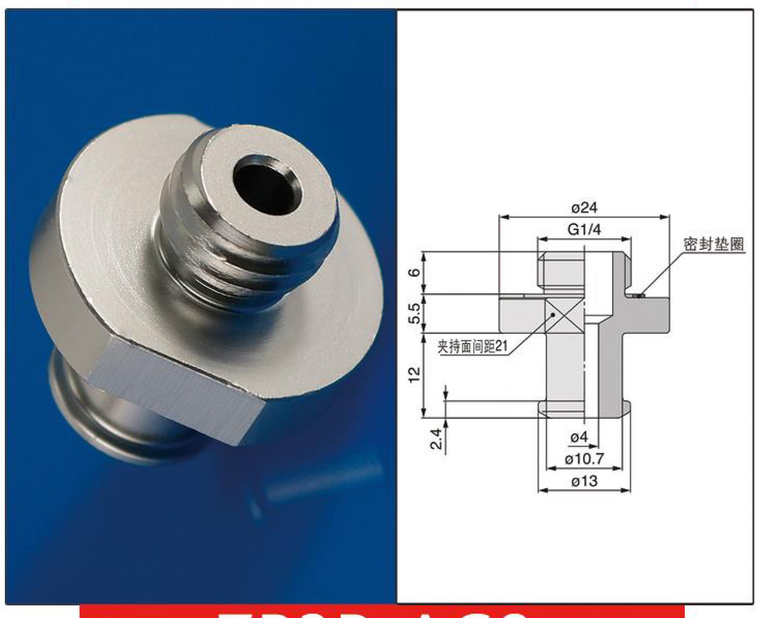

ZP3P-AG2

ZP3P-B8

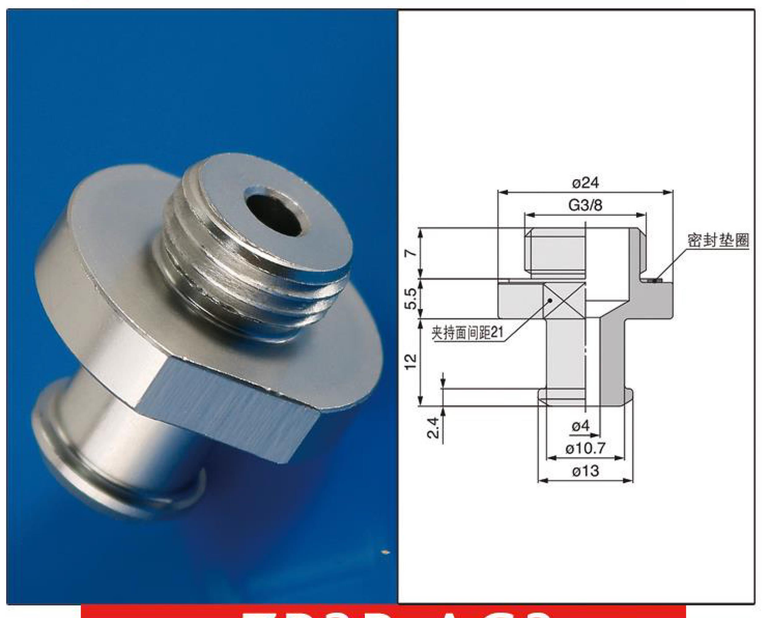

ZP3P-AG3

ZP3P-AG1

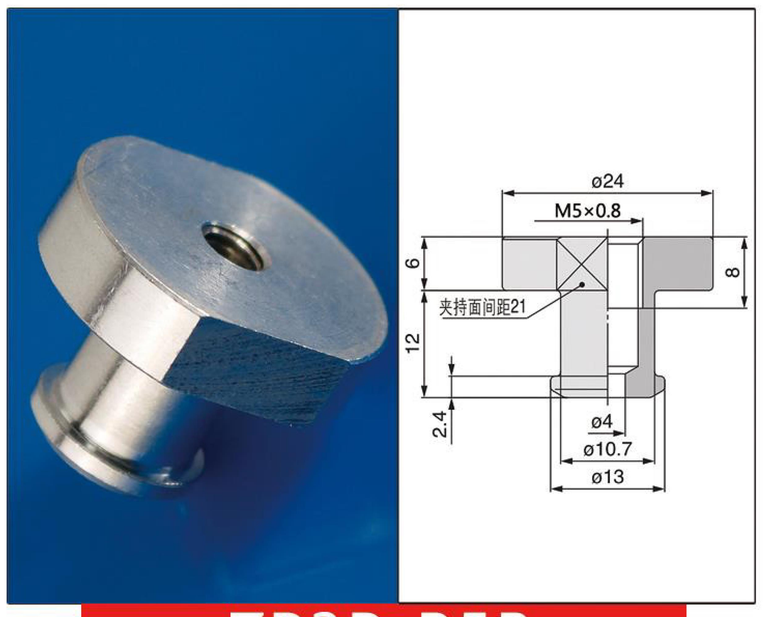

ZP3P-B5B