Inverter parallel wiring diagram

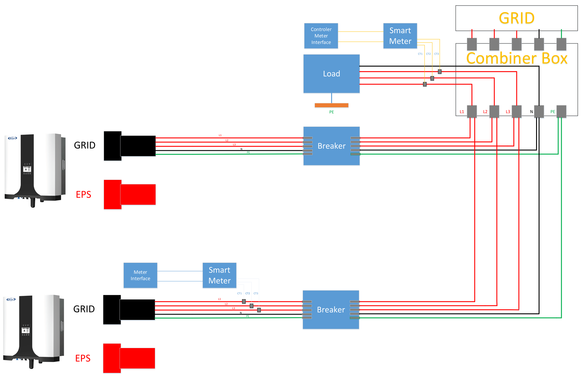

Pure grid-connected mode

Live Wire
Neutral Wire
Earth Wire
Communication Line

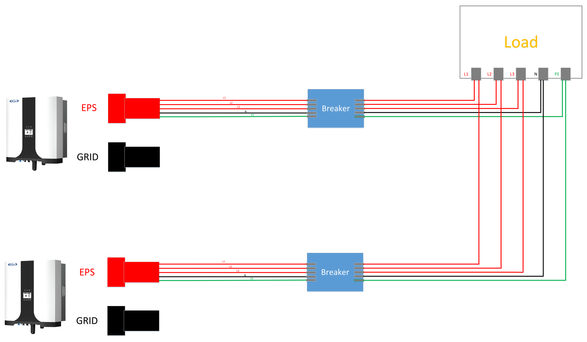

Pure grid-connected mode

Live Wire
Neutral Wire
Earth Wire
Communication Line

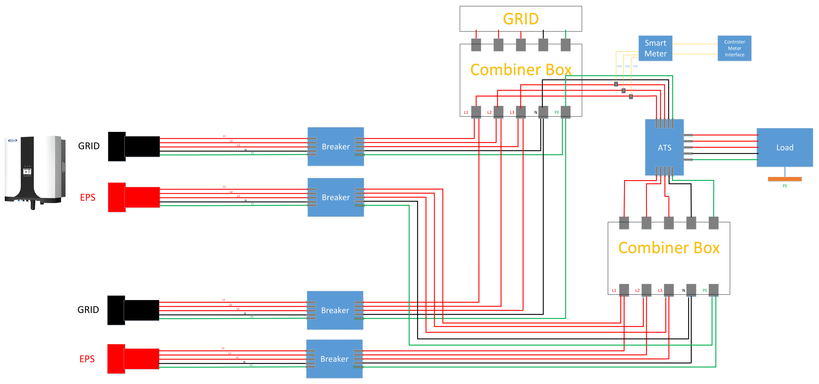

Pure grid-connected mode

Live Wire
Neutral Wire
Earth Wire
Communication Line
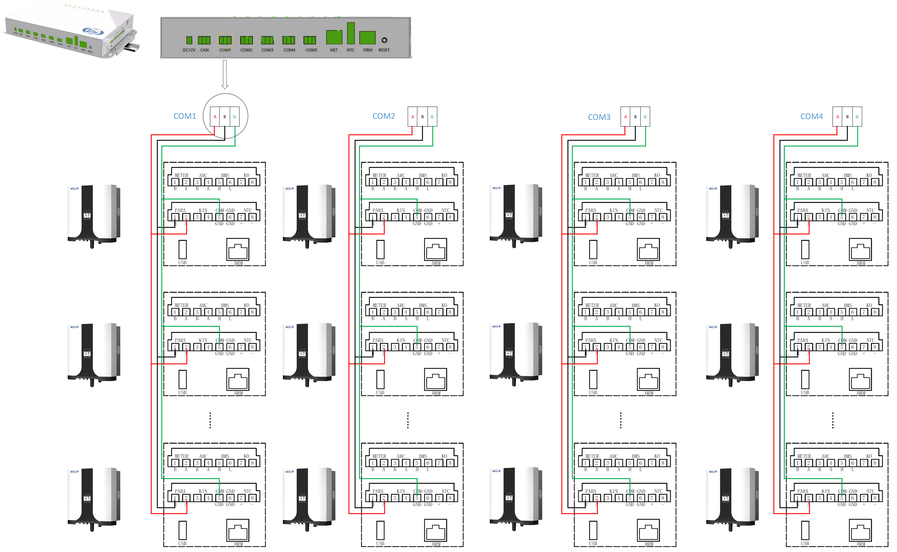
Parallel controller wiring diagram