□ 90MM 90W/120W

交流减速（调速）电机
AC Speed reducing motor

▶ Electrical Specifications

型号Model・类型 Type 上段:齿轮轴 Upper:Pinion Shaft 下段()内:圆轴 Below:Round Shaft 导线型 Lead Wire Type 外形图Dimensions①	带端子箱型 Terminal Box Type 外形图Dimensions②	输出功率 Output power W	电压 Voltage V	频率 Frequency Hz	电流 Current A	启动转矩 Starting Torque mN.m	额定转矩 Rated Torque mN.m	额定转速 Rated Speed r/min	电容器容量 Capacitor μF
5IK90GU-AF (5IK90A-AF)	5IK90GU-AFT (5IK90A-AFT)	90	1ph 100	50	1.55	450	700	1250	25.0
				60	1.85		570	1550	
5IK90GU-EF (5IK90A-EF)	5IK90GU-EFT (5IK90A-EFT)	90	1ph 110	60	1.40	500	570	1550	20.0
			1ph 120		1.45				
5IK90GU-CF (5IK90A-CF)	5IK90GU-CFT (5IK90A-CFT)	90	1ph 220	50	0.72	450	700	1250	5.0
			1ph 230		0.70				
5IK90GU-HF (5IK90A-HF)	5IK90GU-HFT (5IK90A-HFT)	90	1ph 220	60	0.71	450	570	1550	5.0
			1ph 230		0.75				
5IK90GU-SF (5IK90A-SF)	5IK90GU-SFT (5IK90A-SFT)	90	3ph 220	50	0.60	1350	700	1250	-
				60	0.55	1100	570	1550	
5IK90GU-SF (5IK90A-S3F)	5IK90GU-SFT (5IK90A-S3FT)	90	3ph 380	50	0.35	1350	700	1250	-
				60	0.32	1100	570	1550	
5IK120GU-AF (5IK120A-AF)	5IK120GU-AFT (5IK120A-AFT)	120	1ph 100	50	2.10	600	930	1250	30.0
				60	2.50		750	1550	
5IK120GU-EF (5IK120A-EF)	5IK120GU-EFT (5IK120A-EFT)	120	1ph 110	60	1.65	600	750	1550	25.0
			1ph 120		1.80				
5IK120GU-CF (5IK120A-CF)	5IK120GU-CFT (5IK120A-CFT)	120	1ph 220	50	1.00	650	930	1250	7.0
			1ph 230		0.95				
5IK120GU-HF (5IK120A-HF)	5IK120GU-HFT (5IK120A-HFT)	120	1ph 220	60	1.00	600	750	1550	7.0
			1ph 230		0.95				
5IK120GU-SF (5IK120A-SF)	5IK120GU-SFT (5IK120A-SFT)	120	3ph 220	50	0.70	1850	930	1250	-
				60	0.60	1600	750	1550	
5IK120GU-S3F (5IK120A-S3F)	5IK120GU-S3FT (5IK120A-S3FT)	120	3ph 380	50	0.40	1850	930	1250	-
				60	0.35	1600	750	1550	

●各种安全规格以电动机铭牌上的型号取得认证。 ●注："-A" 型号中电压为110V时，配置电容器容量以实际铭牌为准。

▶ Allowance Torque Unit: Upside (N.m)/Belowside (kgf.cm)

类型 Type 电动机/减速机 Motor/Gearhead	减速比 Gear Ratio		3	3.6	5	6	7.5	9	10	12.5	15	18	20	25	30	36	40	50	60	75	90	100	120	150	180	200
	转速 Speed r/min	50Hz	500	417	300	250	200	166	150	120	100	83	75	60	50	41	37	30	25	20	16	15	12.5	10	8.3	7.5
		60Hz	600	500	360	300	240	200	180	144	120	100	90	72	60	50	45	36	30	24	20	18	15	12	10	9
5IK90GU-AF□ 5IK90GU-EF□ 5IK90GU-CF□ 5IK90GU-HF□ 5IK90GU-SF□	5GU□KB 5GU□K	50Hz	1.70	2.00	2.80	3.40	4.30	5.10	5.31	6.40	7.70	9.20	9.55	11.6	13.6	16.6	18.1	20.0	20.0	20.0	20.0	20.0	20.0	20.0	20.0	20.0
			17.3	20.4	28.6	34.7	43.9	52.0	54.2	65.3	78.6	93.3	97.4	118	142	169	184	200	200	200	200	200	200	200	200	200
		60Hz	1.40	1.70	2.30	2.80	3.50	4.20	4.43	5.20	6.20	7.50	7.81	9.40	11.3	13.5	14.5	18.8	20.0	20.0	20.0	20.0	20.0	20.0	20.0	20.0
			14.3	17.3	23.5	28.6	35.7	42.9	45.2	53.1	63.3	76.5	79.6	95.9	115	138	148	192	200	200	200	200	200	200	200	200
5IK120GU-AF□ 5IK120GU-EF□ 5IK120GU-CF□ 5IK120GU-HF□ 5IK120GU-SF□	5GU□KB 5GU□K	50Hz	2.30	2.70	3.80	4.50	5.60	6.80	7.01	8.50	10.2	12.2	12.5	15.3	18.4	20.0	20.0	20.0	20.0	20.0	20.0	20.0	20.0	20.0	20.0	20.0
			23.4	27.5	38.7	45.9	57.1	69.3	71.5	86.7	104	124	128	156	187	200	200	200	200	200	200	200	200	200	200	200
		60Hz	1.80	2.20	3.00	3.60	4.60	5.50	5.73	6.80	8.20	9.80	10.1	12.4	14.9	17.8	19.5	20.0	20.0	20.0	20.0	20.0	20.0	20.0	20.0	20.0
			18.3	22.4	30.6	36.7	46.9	56.1	58.5	69.5	83.6	100	103	126	152	181	199	200	200	200	200	200	200	200	200	200

● 减速品型号的□中为减速比的数值。
● ▭色表示与电动机同一方向运转，其他则为相反方向。

□ 90MM 90W/120W

交流减速（调速）电机
AC Speed reducing motor

▶ Motor Mounting Dimension

circular shaft motor 圆轴电机 5IK90A-CF 5IK90RA-CF	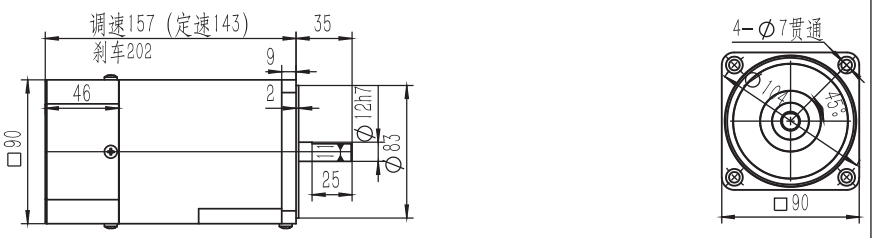	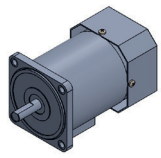
standard motor 标准电机 5IK90GU-CF+5GU □ KB 5IK90RGU-CF+5GU □ KB	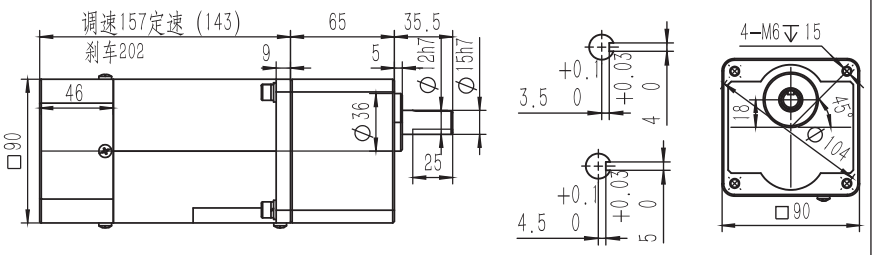	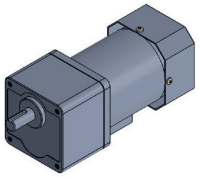
standard motor （with ear shape） 标准电机（带耳型） 5IK90GU-CF+5GU □ K 5IK90RGU-CF+5GU □ K	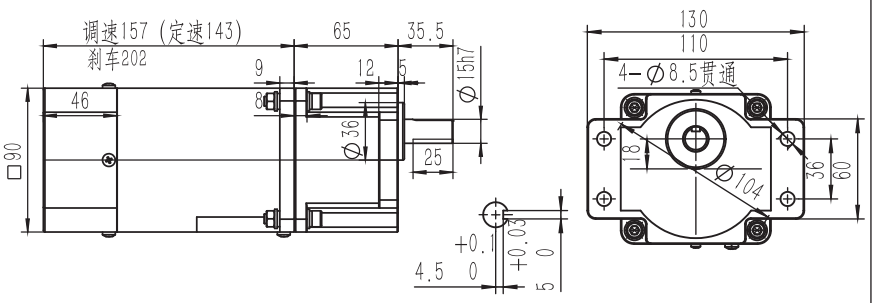	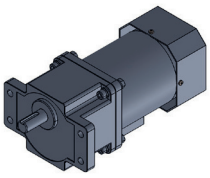
right-angle hollow shaft motor 直角中空电机 5IK90GU-CF+5GU □ RC 5IK90RGU-CF+5GU □ RC	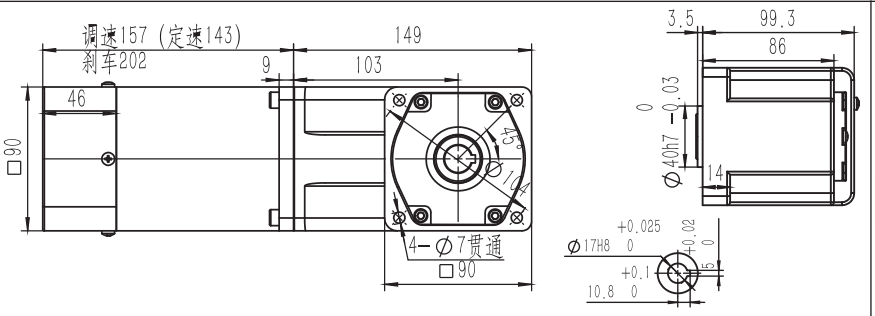	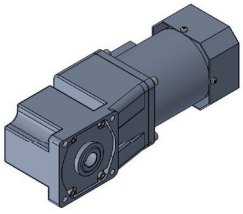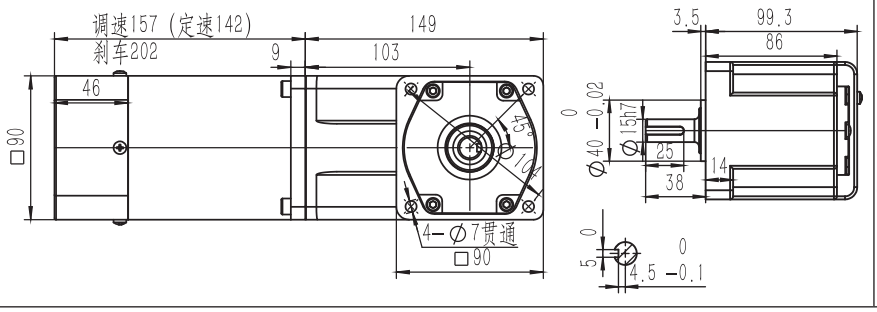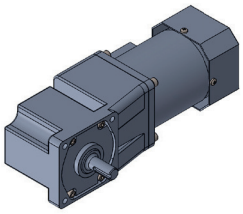
right-angle motor 直角中实电机 5IK90GU-CF+5GU □ RT 5IK90RGU-CF+5GU □ RT